RESPIRATORY CARE

Research Article | Original Research

The effect of filters on CPAP delivery by helmet

https://doi.org/10.4187/respcare.09822

Cite as: RESPCARE 2022; 10.4187/respcare.09822

Received: 22 November 2021
Accepted: 15 February 2022

The effect of filters on CPAP delivery by helmet

Daniele Privitera, MSN, CCRN[1], Nicolò Capsoni, MD[1], Francesco Zadek, MD[2,3], Paolo Vailati CCRN[1], Chiara Airoldi, MSc[4]; Mattia Cozzi CCRN[1], Federico Pierotti CCRN[1], Roberto Fumagalli, MD[2,3], Andrea Bellone, MD[1], Thomas Langer MD[2,3]

[1] Department of Emergency Medicine, ASST Grande Ospedale Metropolitano Niguarda, Milan, Italy

[2] Department of Medicine and Surgery, University of Milan-Bicocca, Monza, Italy.

[3] Department of Anesthesia and Intensive Care Medicine, Niguarda Ca' Granda, Milan, Italy.

[4] Department of Translation Medicine, University of Piemonte Orientale, Novara, Italy

Address for correspondence: Daniele Privitera, MSN, CCRN, Department of Emergency Medicine, ASST Grande Ospedale Metropolitano Niguarda, Milan, Italy. Tel +390264442294; email: daniele.privitera@ospedaleniguarda.it

ABSTRACT

Background: When helmet continuous positive airway pressure (H-CPAP) is performed using a Venturi system, filters are frequently interposed in the respiratory circuit to reduce noise within the helmet. The effect of the interposition of these filters on delivered fresh gas flow and the resulting inspired fraction of oxygen (FiO_2) is currently unknown.

Methods: In a bench study, two different Venturi systems (Whisperflow and Harol) were used to generate three different gas flow/FiO_2 couples (80 L/min-FiO_2 0.6; 100 L/min-FiO_2 0.5; 120 L/min-FiO_2 0.4). Different combinations of filters were applied at the flow generator input line and/or at the helmet inlet port. Two types of filters were used for this purpose: a heat and moister exchanger filter and an electrostatic filter. The setup without filters was used as Baseline. Gas flow and FiO_2 were measured for each setup.

Results: Compared to Baseline, the interposition of filters reduced the gas flow between 1 and 13% ($p<0.01$). The application of a filter at the Venturi system or at the Helmet generated a comparable flow reduction (-3 ± 2% *vs.* -4 ± 2%, $p=0.12$), while a greater flow reduction (-7 ± 4%) was observed when filters were applied at both sites ($p<0.001$). An increase in FiO_2 up to 5% was observed with filters applied. A strong inverse linear relationship ($p<0.001$) was observed between the resulting gas flow and FiO_2.

Conclusions: The use of filters during H-CPAP reduces the flow delivered to the helmet and, consequently, modifies FiO_2. If filters are applied, an adequate gas flow should be administered to guarantee a constant CPAP during the entire respiratory cycle and avoid CO_2 rebreathing. Moreover, it might be important to measure the effective FiO_2 delivered to the patient to guarantee a precise assessment of oxygenation.

Keywords: Continuous Positive Airway Pressure; Non-invasive Ventilation; Respiratory Insufficiency; Noise; Emergency Department

BACKGROUND

Continuous positive airway pressure (CPAP) is widely used in the acute care setting for the treatment of hypoxemic respiratory failure due to acute cardiogenic pulmonary edema (1–3) and pneumonia, including viral pneumonia due to COVID-19 (4–6). Frequently, CPAP is delivered through a helmet (7). The helmet is broadly used in southern Europe and particularly in Italy, mainly for the treatment of hypoxemic respiratory failure and acute cardiogenic pulmonary edema (7). To perform helmet-CPAP (H-CPAP), a continuous flow generator is used to provide a fresh gas flow (8). This gas flow is delivered inside the helmet and generates a positive end-expiratory pressure (PEEP) as it flows through an expiratory valve (9). Three main types of flow generators are commonly used: multiple columns, gas blenders, and Venturi system flow generators (9). All these systems are able to deliver continuous gas flows at high rates. These high gas flows are required for two main reasons: first, to exceed the patient's peak inspiratory flow, ensuring a stable continuous positive airway pressure throughout the entire respiratory cycle; second, to avoid carbon dioxide (CO_2) rebreathing (10). In most cases, 60 L/min is considered an adequate gas flow to perform H-CPAP (8,11). However, higher flows may be required in case of severe respiratory distress with tachypnea, large tidal volumes, and high minute ventilation (12).

Different kinds of PEEP valves are commercially available: water-sealed valves, precalibrated fixed PEEP valves, and adjustable PEEP valves (9). Among these, adjustable valves have shown a variable degree of flow-dependency, potentially leading to higher than expected continuous airway pressures (9). On the other hand, precalibrated and water-sealed valves exhibit a better performance: precalibrated valves have a flow-independent behavior, while water-sealed valves have a low degree of flow-dependency (9).

In studies comparing the effectiveness of facemasks and helmets, skin lesions are the main complications of non-invasive ventilation delivered with the firsts (13), whereas the second can avoid this problem, as there is no direct contact between the helmet and the patient's face. However, the use of helmets is characterized by higher noise levels, potentially limiting patient's comfort (14–

16). In a study on healthy volunteers, Lucchini et al. demonstrated that applying a heat and moisture exchanger filter (HMEF) on the inlet gas port of H-CPAP significantly reduced the noise level recorded inside the helmet, improving subjects' comfort (16). However, while reducing the noise within the helmet, HMEFs add resistance to the respiratory circuits, possibly affecting the delivered fresh gas flow (17). Data about flow variations due to the use of a heat and moisture exchanger and electrostatic filters positioned either at the flow generator input line (as indicated by the manufacturer) and/or at the inlet port of the helmet are currently lacking.

Therefore, the present bench study aims to assess the impact of the application of filters during H-CPAP performed using Venturi systems on (i) delivered fresh gas flow, (ii) FiO_2, and (iii) the noise level both inside and outside the helmet.

METHODS

The present bench study was performed at the ASST Grande Ospedale Metropolitano Niguarda, Milan, Italy. A half-body manikin (size medium) was used for the study (**Figure 1**). A certified, medium-sized H-CPAP (DIMAR, Mirandola, Italy) was sealed with standard armpit straps. A fixed precalibrated 10 cmH_2O PEEP valve (Harol S.r.l. San Donato Milanese, Milan, Italy) was applied to the expiratory port of the helmet. A 150 cm respiratory circuit for adults with a smooth inner surface was used (285/5063, DAR™, Covidien, Mansfield, MA, USA). Two different Venturi systems were used for flow generation (9293/D, Harol, S. Donato Milanese, Italy and Whisperflow, Philips Respironics, Murrysville, PA, USA). The flow generators underwent testing and calibration according to the manufacturers' specifications. These devices require a single source of oxygen to generate a fresh gas flow. They use the Venturi effect to drag room air into the circuit and generate a high gas output flow. A supplementary oxygen source located downstream from the air-entrainment valve can be connected to increase FiO_2. According to the selected oxygen flow on the main flow-meter, the generator takes a variable amount of air from the environment, which, added to the oxygen flow, determines the total flow of fresh gas delivered to the patient (range between 0 and 180 L/min). By acting on the second oxygen flow meter, FiO_2 can be adjusted between 0.3 and 1.0.

An electronic flow-meter (TSI 4000 Series®, TSI Inc., Shoreview, USA), able to measure flows ranging between 0-200 L/min, and a rapid-response oxygen analyzer (Handi+, Maxtec, Salt Lake City, Utah), were positioned between the circuit and the CPAP inlet port. Two sound level meters (MK09, 30-130 dBA, 31.5-8KHz, Mertek, China) were used: the first one was placed on the right ear of the manikin, close to the helmet inlet port to measure the noise level within the helmet; the second one was positioned one meter away from the flow generator to simultaneously measure the environmental noise. The oxygen pipeline supply pressure to the flow meter was > 4 bar, *i.e.*, adequate for the correct functioning of the flow generators.

Experimental setup

For each Venturi system, three couples of fresh gas flow and FiO_2 were tested: 80 L/min with FiO_2 0.6; 100 L/min with FiO_2 0.5 and 120 L/min with FiO_2 0.4. Flows of the main and supplementary oxygen sources were adjusted to reach the desired fresh gas flows and FiO_2, measured with the electronic flow-meter and the oxygen analyzer, respectively.

To test the impact on flow, FiO_2 and noise, two different types of filters were used: an HMEF (labeled H) (VT 150-1000ml) and an electrostatic filter (labeled E) (VT 300-1500ml), both from the same manufacturer (DAR™, Covidien, Mansfield, MA, USA). The filters were applied at the flow generator input line (labeled VENTURI), at the helmet inlet port (labeled HELMET), or at both sites (labeled BOTH), obtaining the different setups reported in **Table 1.** The setups without the interposition of filters served as reference and were labeled as BASELINE (18).

Measurements

Before initiation of the experiments, environmental noise was measured using the sound meter placed one meter away from the flow generator. For each Venturi system, gas flow/FiO_2 couple and filter setup, the fresh gas flow was recorded in triplicates. The average value of 3 measurements performed 30 seconds apart was used for analysis. The FiO_2 was acquired after the measured values were stable for 30 seconds. The maximum noise level was recorded simultaneously inside and outside the helmet. The highest value measured was collected.

Statistical analysis

Data from the different gas flow/FiO_2 couples were pooled to analyze factors associated with the reduction in fresh gas flow. Continuous variables are expressed as mean ± standard deviation (SD) or as median [interquartile range (IQR)], according to their distribution. For each setup, the mean of repeated triplicate of flow measurements was used for analysis. The repeatability coefficient of measured flows was calculated by multiplying the within-subject standard deviation for 2.77 as

previously reported (19,20). Percentage variations from baseline values of fresh gas flow and noise were calculated. FiO_2 variations are indicated as an absolute percentage change. The difference in flow reduction according to the applied filter (H or E) and employed Venturi system (Whisperflow or Harol) was assessed using the pairwise t-Test or Wilcoxon Signed Rank Test, as appropriate. Pearson's correlation coefficient was employed to assess the strength of association between flow and resulting FiO_2. A two-way ANOVA was performed considering as outcome variable flow variation or sound level and as factors both the site of filter interposition (BASELINE, VENTURI, HELMET, BOTH) and the type of Venturi system (Whisperflow and Harol). Bonferroni's correction was used for posthoc pairwise comparisons. Statistical significance was defined as $p < 0.05$. Analysis was performed with SigmaPlot v.12.0 (Systat Software, San Jose, CA).

RESULTS

The interposition of filter(s) within the circuit determined a reduction of the total flow of fresh gas. The entity of this reduction ranged between 1 and 13% of baseline fresh gas flow. The repeatability coefficient of measured flows was ±0.49 L/min.

Data from the different couples of gas flow/FiO_2 were pooled to analyze the role of presence/site of filter interposition (BASELINE, VENTURI, HELMET, or BOTH), type of used Venturi system (Harol or Whisperflow), and their interaction on the reduction of gas flow (**Figure 2**). As compared to BASELINE, in all studied conditions (VENTURI, HELMET, and BOTH), a significant reduction in fresh gas flow was recorded ($p<0.01$). The application of a filter at the Venturi system or at the helmet generated a comparable flow reduction (-3 ± 2% *vs.* -4 ± 2%, respectively, $p=0.12$). However, the interposition of filters at both sites caused a significantly greater reduction in delivered fresh gas flow as compared to both the application of a filter at the Venturi system (-7 ± 4% *vs.* -3 ± 2%, $p<0.001$) and at the helmet (-7 ± 4% *vs.* -4 ± 2%, $p<0.001$). The flow reduction observed with Harol was significantly lower than the one recorded when using the Whisperflow, both overall (-3 ± 2% *vs.* -7 ± 3%, $p<0.001$) and for each site of filter interposition ($p <0.05$, **Figure 2**). Overall, the effect of the interposition of filters was more pronounced on the Whisperflow system ($p<0.001$, 2-way-ANOVA interaction). To evaluate if the type of filter had a role in flow reduction, we compared flow reductions in the settings where either H (setups 1, 2, and 4) or E (setups 5, 6, and 8) filters were used. We excluded from this analysis setups 3 and 7, in which a combination of H and E filters was used. The observed difference regarding the reduction of fresh gas flow was -6 ± 3 % *vs.* -4 ± 3%, $p=0.06$ for H and E, respectively.

The interposition of filters had a significant effect also on the resulting FiO_2. In particular, for all 3 setups, a strong negative linear relationship was observed between the resulting fresh gas flow and the increase in FiO_2 (**Figure 3**, Panels A-C).

Regarding noise levels inside the helmet, Harol generated, overall, a significantly higher noise than the Whisperflow system (82 ± 4 dB vs. 76 ± 3 dB, p <0.001). The application of a filter at the inlet line of the flow generator (VENTURI) had no effect on the noise within the helmet, as compared to baseline (**Figure 4**). The interposition of a filter at the helmet (HELMET) significantly reduced the noise within it compared to BASELINE (78 ± 4 dB *vs.* 82 ± 5 dB, p=0.008). Finally, the interposition of filters at both sites (BOTH) resulted in a similar noise level as the single filter at the helmet inlet (HELMET) but was significantly lower as compared to both baseline and the single filter applied at the flow generator (VENTURI) (p <0.001 for both). Overall, the effect of the interposition of filters on noise within the helmet was similar for the two flow generation systems (p = 0.80, 2-way-ANOVA interaction).

Before starting the test, the environmental noise inside the room ranged between 39.5 and 41 dBA. During the test, baseline values, *i.e.*values without the interposition of filters, were 74 ± 2 dB and 61 ± 1 dB for Harol and Whisperflow, respectively (p<0.001, **Figure E1**). The application of a filter at the Venturi system significantly reduced the environmental noise as compared to baseline (61 ± 7 dB vs. 67 ± 7 dB, p<0.001), while no effect was recorded when the filter was applied to the helmet (67 ± 7 dB *vs.* 67 ± 7 dB, p=1.0). Finally, the application of filters at both sites had no relevant additional muffling effect.

Values of fresh gas flow, FiO_2, and noise resulting from the interposition of the filters for the three gas flow/FiO_2 couples are reported in **Tables E1**, **E2,** and **E3** of the supplementary materials.

DISCUSSION

Our main finding is that the interposition of filters, a maneuver frequently applied in clinics, significantly reduced the delivered fresh gas flow. The most relevant flow reduction was observed when two filters were applied at the same time. Due to the application of filters, FiO_2 increased, and the increase was linear with flow reduction. Finally, although applying an additional filter to the Venturi system did not significantly reduce the noise within the helmet, it allowed to decrease the environmental noise.

Heat and moisture exchangers filters are usually interposed in the respiratory circuit to heat and humidify air entering the airways when the upper airways are bypassed, such as during invasive mechanical ventilation. In addition, electrostatic filters are frequently interposed within the breathing circuit with the aim of reducing the transmission of microbes (21). In the context of helmet CPAP performed with a Venturi system, filters are employed to muffle the noise within the helmet in order to increase the patient's comfort (16). However, the effect of these filters on delivered fresh gas flow was unknown.

We observed a consistent reduction in delivered fresh gas flow applying filters within the respiratory circuit. The widest flow reduction was observed when filters were applied both at the Venturi system and at the helmet inlet (**Figure 2**). Of note, the reduction differed according to the used flow generation system, with greater reductions observed when the Whisperflow was employed. Furthermore, the type of filter *per se* seems to have a role in the flow reduction since larger drops in the flow were observed when HMEFs were used. It is conceivable that HMEFs generate greater resistance due to their hygroscopic membrane (absent in electrostatic filters) (17,22,23)

In addition to the effect on delivered gas flow, we observed that the application of filters within the respiratory circuit caused a slight increase in delivered FiO_2. The variations were not particularly marked, as they reached a maximum increase in FiO_2 of 5%. Interestingly, in all settings,

FiO_2 increased linearly with the reduction in the delivered fresh gas flow (**Figure 3**). This finding might be explained by a modification of the gas mixture. For instance, both Harol and Whisperflow systems use the negative pressure developed by Venturi's effect to drag room air into the system. The use of filters has the net effect of increasing the resistance to flow, reducing the negative pressure generated by Venturi's effect, and ultimately, limiting the entrance of room air (FiO_2 of 0.21) in the circuit. On the contrary, the amount of oxygen delivered to the system is constant, justifying the increase in FiO_2.

Finally, we studied noise within the helmet and in the environment. Noise is often a cause of patients' intolerance to CPAP and of therapeutic failure (16). The two Venturi systems employed in our study generated significantly different noise levels (**Figure 4**), with the Harol system characterized by higher decibels. In accordance with the literature (14,16), we observed that the application of a filter at the helmet inlet port determined a marked reduction of the noise inside it. On the contrary, the application of a filter only on the flow generator input line did not have this effect. Of note, the muffling intensity of respiratory filters was similar for the two studied flow generators (p=0.80).

Environmental noise in the Emergency Department often exceeds the maximum of 40 dB recommended by the World Health Organization and is thus a serious problem for both patients and medical/nursing staff (24–26). A noisy environment favors errors and is considered a risk factor for provider burnout and negative outcomes for patients (27). We observed significant differences between the environmental noise generated by the two Venturi systems used in our bench study. Also in this case, the Harol system generated higher noise levels. The application of a filter at the flow generator input line significantly reduced the environmental noise but, as discussed above, contributed to the reduction in fresh gas flow.

Clinical implications

In patients requiring respiratory support with H-CPAP, two aspects need to be considered. On the one hand, an adequate flow inside the helmet is fundamental to exceed the patient's peak inspiratory flow, maintain a constant CPAP, avoid rebreathing and thus optimize the respiratory support (13,28,29). On the other hand, noise needs to be reduced to increase patients' comfort and tolerance to the respiratory support (14,16). Our study shows that the two applied Venturi systems generate different noise levels. Moreover, it confirms that the application of filters within the respiratory circuit is effective in reducing noise within the helmet. However, when using Venturi flow generators, filters reduce the delivered fresh gas flow and thus cause a slight increase in FiO_2. In this context, it is therefore important to be aware of these implications. Flow can easily be increased to ensure adequate values; FiO_2 can be measured to guarantee a precise assessment of oxygenation.

Limitations

The bench nature of our study has advantages and disadvantages. On the one hand, it allowed to assess and compare precisely the effects of the interposition of filters on several outcome variables. On the other, of course, we could not evaluate patient-centered outcomes, such as comfort and respiratory variables. Moreover, our model does not account for the potential impact on flow and FiO_2 of the patient's inspiratory effort.

Conclusions

The interposition of filters within the breathing circuit reduces the fresh gas flow delivered to the helmet. In addition, the interposition of filters slightly increases the effective FiO_2 linearly with gas flow reduction. When filters are interposed within the circuit to reduce the noise level, attention should be paid to guarantee an adequate fresh gas flow. Finally, resulting FiO_2 should be confirmed in order to avoid underestimations of the severity of hypoxemia.

REFERENCES

1. Weng CL, Zhao YT, Liu QH, Fu CJ, Sun F, Ma YL, et al. Meta-analysis: Non-invasive ventilation in acute cardiogenic pulmonary edema [published correction appears in Ann Intern Med. 2010 Aug 17;153(4):280] [published correction appears in Ann Intern Med. 2010 Jul 6;153(1):67]. *Ann Intern Med*. 2010;152(9):590-600.
2. Collins SP, Mielniczuk LM, Whittingham HA, Boseley ME, Schramm DR, Storrow AB. The use of non-invasive ventilation in emergency department patients with acute cardiogenic pulmonary edema: a systematic review. *Ann Emerg Med*. 2006;48(3):260-269.e2694.
3. Vital FM, Ladeira MT, Atallah AN. Non-invasive positive pressure ventilation (CPAP or bilevel NPPV) for cardiogenic pulmonary oedema. *Cochrane Database Syst Rev*. 2013;(5):CD005351.
4. Cosentini R, Brambilla AM, Aliberti S, Bignamini A, Nava S, Maffei A, et al. Helmet continuous positive airway pressure vs oxygen therapy to improve oxygenation in community-acquired pneumonia: a randomized, controlled trial. *Chest*. 2010;138(1):114-120.
5. Ferrer M, Esquinas A, Leon M, Gonzalez G, Alarcon A, Torres A. Non-invasive ventilation in severe hypoxemic respiratory failure: a randomized clinical trial. *Am J Respir Crit Care Med*. 2003;168(12):1438-1444.
6. Patel BK, Wolfe KS, Pohlman AS, Hall JB, Kress JP. Effect of Non-invasive Ventilation Delivered by Helmet vs Face Mask on the Rate of Endotracheal Intubation in Patients With Acute Respiratory Distress Syndrome: A Randomized Clinical Trial. *JAMA*. 2016;315(22):2435-2441.
7. Crimi C, Noto A, Princi P, Esquinas A, Nava S. A European survey of non-invasive ventilation practices. *Eur Respir J*. 2010;36(2):362-369.
8. Coppadoro A, Zago E, Pavan F, Foti G, Bellani G. The use of head helmets to deliver non-invasive ventilatory support: a comprehensive review of technical aspects and clinical findings. *Crit Care*. 2021;25(1):327. Published 2021 Sep 8.
9. Isgrò S, Zanella A, Giani M, Abd El Aziz El Sayed Deab S, Pesenti A, Patroniti N. Performance of different PEEP valves and helmet outlets at increasing gas flow rates: a bench top study. *Minerva Anestesiol*. 2012;78(10):1095-1100.
10. Brusasco C, Corradi F, De Ferrari A, Ball L, Kacmarek RM, Pelosi P. CPAP Devices for Emergency Prehospital Use: A Bench Study. *Respir Care*. 2015;60(12):1777-1785.
11. British Thoracic Society Standards of Care Committee. Non-invasive ventilation in acute respiratory failure. *Thorax* 2002;57(3):192-211

12. Glover GW, Fletcher SJ. Assessing the performance of the Whisperflow continuous positive airway pressure generator: a bench study. *Br J Anaesth*. 2009;102(6):875-881.
13. Pisani L, Carlucci A, Nava S. Interfaces for non-invasive mechanical ventilation: Technical aspects and efficiency. *Minerva Anestesiol.* 2012;78(10):1154–61.
14. Cavaliere F, Conti G, Costa R, Proietti R, Sciuto A, Masieri S. Noise exposure during non-invasive ventilation with a helmet, a nasal mask, and a facial mask. *Intensive Care Med*. 2004;30(9):1755-1760.
15. Cavaliere F, Conti G, Costa R, Spinazzola G, Proietti R, Sciuto A, Masieri S. Exposure to noise during continuous positive airway pressure: influence of interfaces and delivery systems. *Acta Anaesthesiol Scand*. 2008 Jan;52(1):52-6.
16. Lucchini A, Bambi S, Gurini S, Di Francesco E, Pace L, Rona R, et al. Noise Level and Comfort in Healthy Subjects Undergoing High-Flow Helmet Continuous Positive Airway Pressure. *Dimens Crit Care Nurs*. 2020;39(4):194-202.
17. Wilkes AR. Heat and moisture exchangers and breathing system filters: their use in anaesthesia and intensive care. Part 2 - practical use, including problems, and their use with paediatric patients. *Anaesthesia*. 2011;66(1):40-51.
18. Hernández-Molina R, Fernández-Zacarías F, Benavente-Fernández I, Jiménez-Gómez G, Lubián-López S. Effect of Filters on the Noise Generated by Continuous Positive Airway Pressure Delivered via a Helmet. *Noise Health*. 2017;19(86):20-23.
19. Vaz S, Falkmer T, Passmore AE, Parsons R, Andreou P. The case for using the repeatability coefficient when calculating test-retest reliability. *PLoS One*. 2013;8(9):e73990. Published 2013 Sep 9.
20. Bland JM, Altman DG. Measurement error. *BMJ*. 1996;313(7059):744.
21. Wilkes AR. Heat and moisture exchangers and breathing system filters: their use in anaesthesia and intensive care. Part 1 - history, principles and efficiency. *Anaesthesia*. 2011;66(1):31-39.
22. Lucato JJ, Tucci MR, Schettino GP, Adams AB, Fu C, Forti G Jr, et al. Evaluation of resistance in 8 different heat-and-moisture exchangers: effects of saturation and flow rate/profile. *Respir Care*. 2005 May;50(5):636-43.
23. Ploysongsang Y, Branson R, Rashkin MC, Hurst JM. Pressure flow characteristics of commonly used heat-moisture exchangers. *Am Rev Respir Dis*. 1988;138(3):675-678.
24. Berglund B, Lindvall T, Schwela DH. New Who Guidelines for Community Noise. *Noise & Vibration Worldwide*. 2000;31(4):24-29.
25. Orellana D, Busch-Vishniac IJ, West JE. Noise in the adult emergency department of Johns Hopkins Hospital. *J Acoust Soc Am*. 2007;121(4):1996-1999.

26. Tijunelis MA, Fitzsullivan E, Henderson SO. Noise in the ED. *Am J Emerg Med*. 2005;23(3):332-335.

27. Donchin Y, Seagull FJ. The hostile environment of the intensive care unit. *Curr Opin Crit Care*. 2002;8(4):316-320.

28. Patroniti N, Foti G, Manfio A, Coppo A, Bellani G, Pesenti A. Head helmet versus face mask for non-invasive continuous positive airway pressure: a physiological study. *Intensive Care Med*. 2003;29(10):1680-1687.

29. Taccone P, Hess D, Caironi P, Bigatello LM. Continuous positive airway pressure delivered with a "helmet": effects on carbon dioxide rebreathing. *Crit Care Med*. 2004;32(10):2090-2096.

FIGURE LEGENDS

Figure 1: Experimental setup

Figure 2. Box and dot plot representation of percentage variations in gas flow resulting from the interposition of respiratory filters at the Venturi system, before the Helmet or at both sites (n=54; 48 points are presented + 6 baseline values). Data are presented separately according to the used Venturi system. White plots represent data acquired using the Harol system, while gray plots represent data acquired using Whisperflow. The horizontal dashed line represents 0% variation, *i.e.* the baseline reference value without the interposition of filters. $p<0.001$ refers to the P-value of the Two-Way ANOVA; * $p< 0.05$ vs. Whisperflow; ** $p< 0.001$ *vs.* Whisperflow.

Figure 3: Fresh gas flow to resulting FiO_2 relationship in the 3 experimental settings

Panel A refers to gas flow 80 L/min - FiO_2 0.6; **Panel B** refers to gas flow 100 L/min - FiO_2 0.5. **Panel C** refers to gas flow 120 L/min - FiO_2 0.4; Horizontal dashed lines represent baseline FiO_2. N=18 for each experimental setting.

Figure 4. Box and dot plot representation of absolute noise levels within the helmet at BASELINE (without the interposition of filters) and after the interposition of filters at the flow generation system (VENTURI), at the inlet port of the helmet (HELMET), and at both sites (BOTH) (n=54). Data are presented separately according to the used Venturi system. White plots represent data acquired using the Harol system, while gray plots represent data acquired using Whisperflow. A two-way ANOVA was performed (p=0.80) * $p< 0.001$ vs. Whisperflow; NS = non significant.

QUICK LOOK

Current knowledge

Helmet CPAP is usually performed using a fresh gas flow (> 60 L/min) provided through a continuous flow generator. Respiratory filters (usually positioned at the inlet gas port of the helmet) are frequently employed to reduce the noise level inside the helmet, thus improving patient's comfort.

What this paper contributes to our knowledge

When helmet CPAP is provided using a Venturi flow generator, the application of filters within the respiratory circuit significantly reduces the delivered fresh gas flow. This is associated with an increased fraction of inspired oxygen. In this setting, if filters are applied, an adequate gas flow should be guaranteed. Moreover, it might be important to measure the effective FiO_2 in order to assess oxygenation precisely.

TABLES

Table 1: Experimental setups

Venturi System	Flow/FiO_2	Filter combinations
Harol	80 L/min - FiO_2 0.6;	0/0 *(Baseline)*
Whisperflow	100 L/min - FiO_2 0.5;	E/0 *(Setup 1)*
	120 L/min - FiO_2 0.4;	E/E *(Setup 2)*
		E/H *(Setup 3)*
		0/E *(Setup 4)*
		0/H *(Setup 5)*
		H/0 *(Setup 6)*
		H/E *(Setup 7)*
		H/H *(Setup 8)*

Table 1 summarizes the two Venturi Systems, the three flow/FiO_2 couples and the nine different filter combinations tested. The different positions of the filters were expressed as flow generator input filter/helmet filter, coding the filter type as follows: 0 = No filter; H: Heat and moister exchanger filter; E = Electrostatic filter.

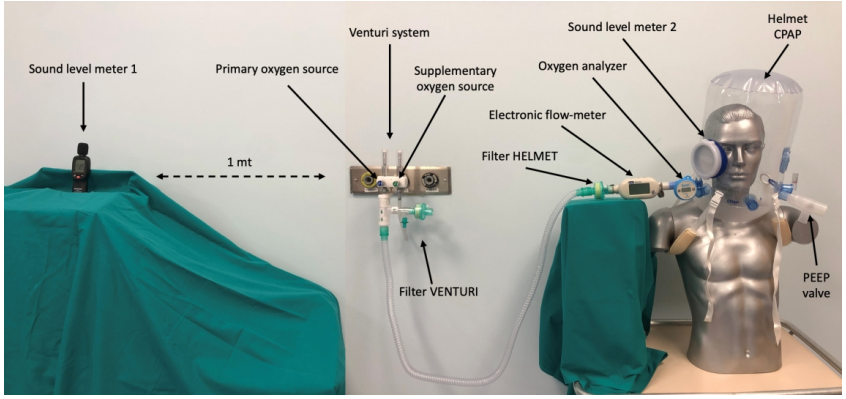

Figure 1

397x187mm (144 x 144 DPI)

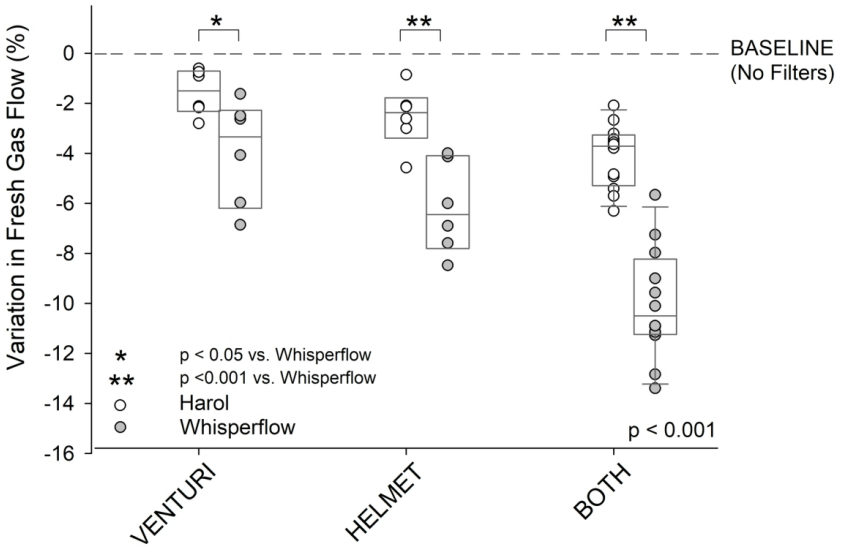

Figure 2

167x123mm (300 x 300 DPI)

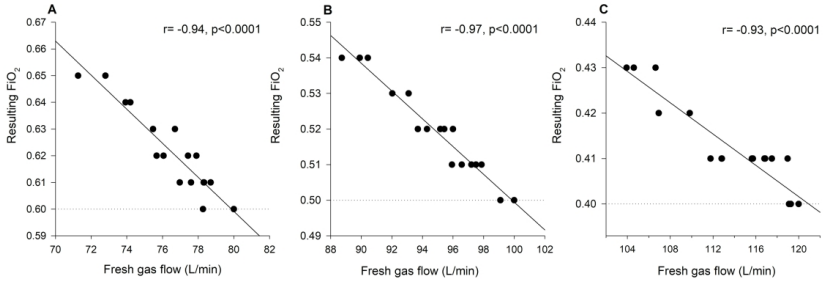

Figure 3

273x97mm (300 x 300 DPI)

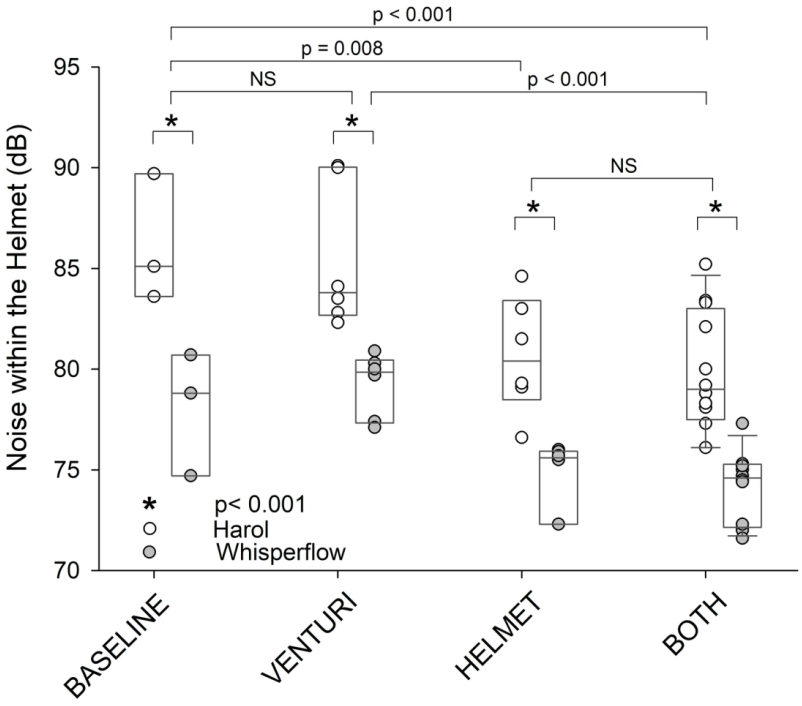

Figure 4

149x127mm (300 x 300 DPI)